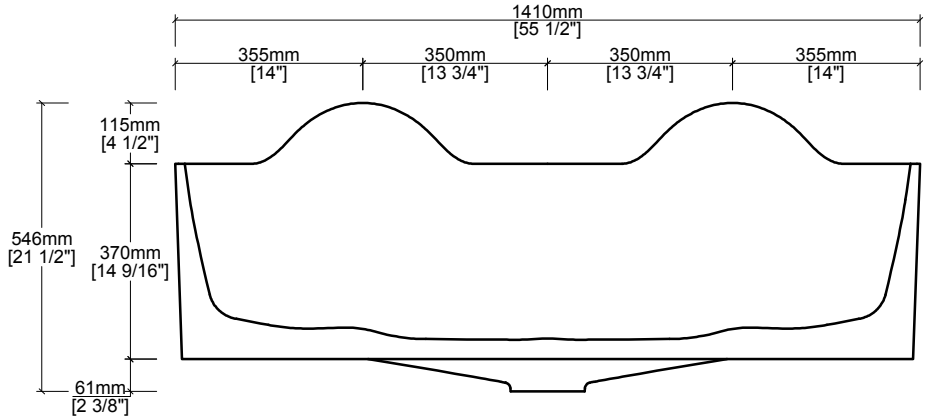
1410mm
[55 1/2"]
355mm
[14"]
350mm
[13 3/4"]
350mm
[13 3/4"]
355mm
[14"]
115mm
[4 1/2"]
546mm
[21 1/2"]
370mm
[14 9/16"]
61mm
[2 3/8"]

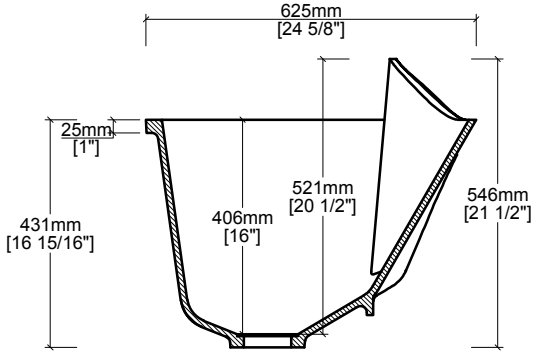
625mm
[24 5/8"]
25mm
[1"]
431mm
[16 15/16"]
406mm
[16"]
521mm
[20 1/2"]
546mm
[21 1/2"]

A-A

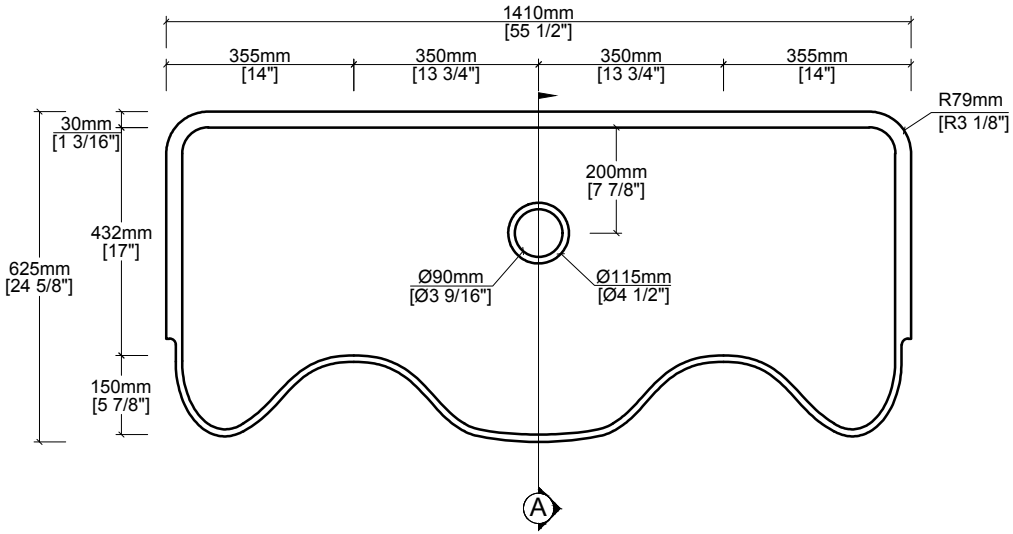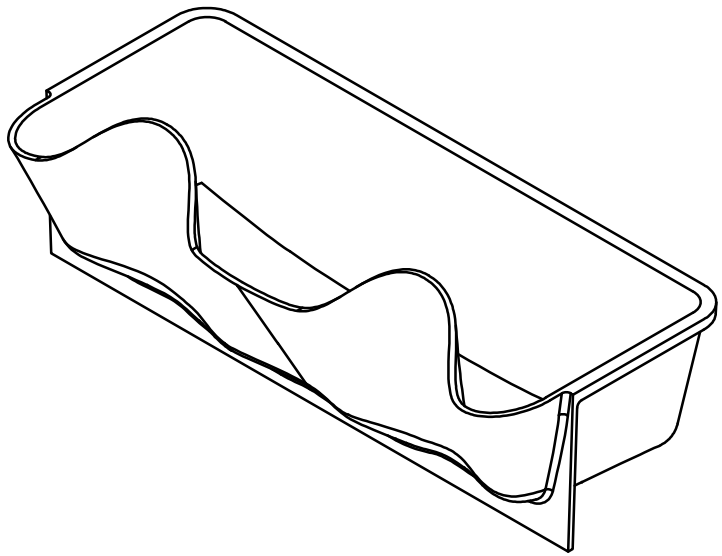
1410mm
[55 1/2"]
355mm
[14"]
350mm
[13 3/4"]
350mm
[13 3/4"]
355mm
[14"]
R79mm
[R3 1/8"]
30mm
[1 3/16"]
200mm
[7 7/8"]
432mm
[17"]
625mm
[24 5/8"]
Ø90mm
[Ø3 9/16"]
Ø115mm
[Ø4 1/2"]
150mm
[5 7/8"]
A