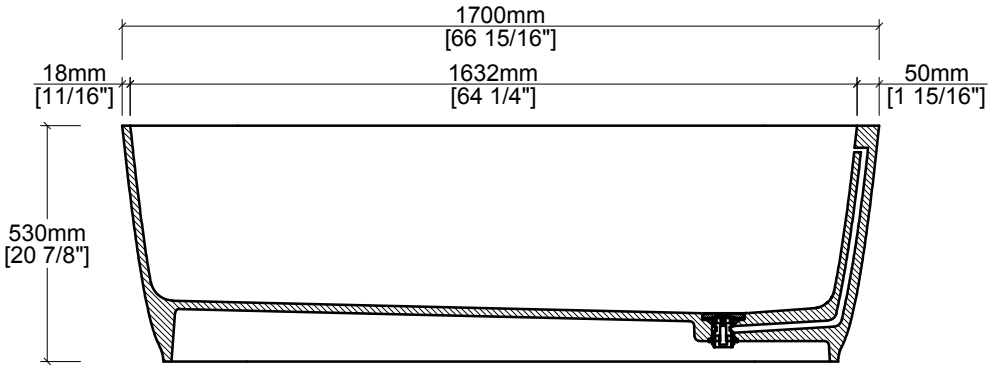
1700mm
[66 15/16"]
18mm
[11/16"]
1632mm
[64 1/4"]
50mm
[1 15/16"]
530mm
[20 7/8"]

A-A

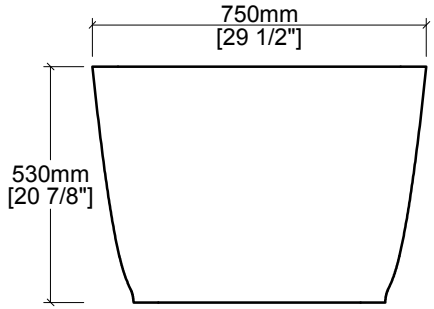
750mm
[29 1/2"]
530mm
[20 7/8"]

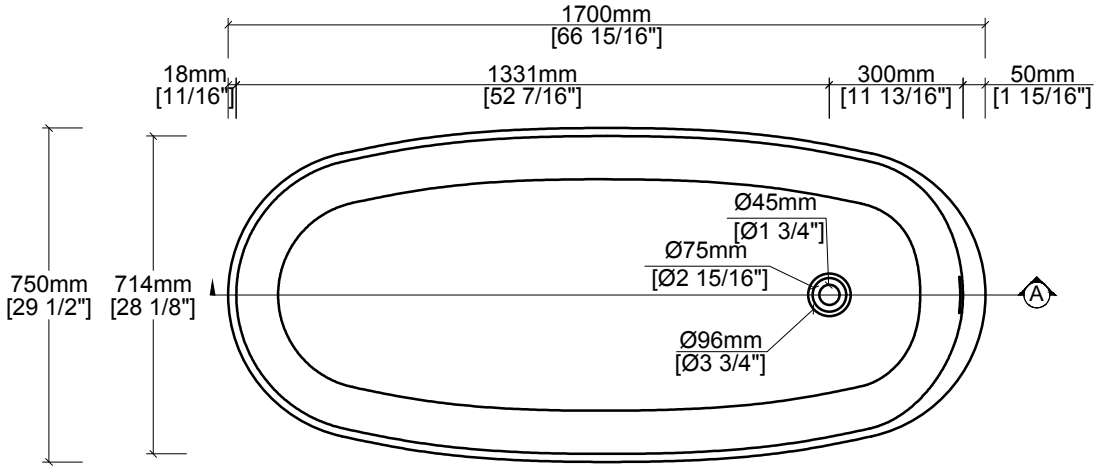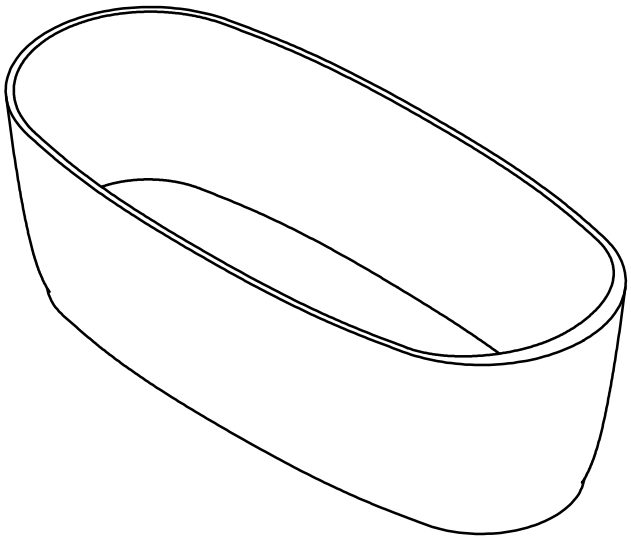
1700mm
[66 15/16"]
18mm
[11/16"]
1331mm
[52 7/16"]
300mm
[11 13/16"]
50mm
[1 15/16"]
750mm
[29 1/2"]
714mm
[28 1/8"]
Ø45mm
[Ø1 3/4"]
Ø75mm
[Ø2 15/16"]
Ø96mm
[Ø3 3/4"]
A