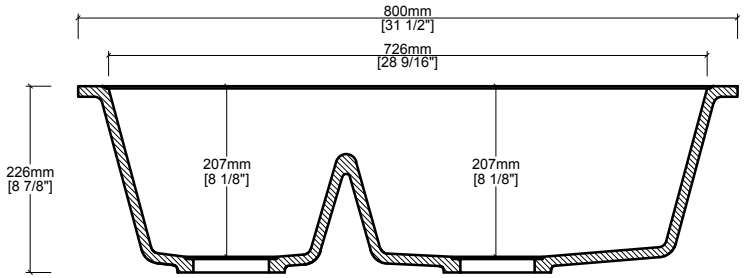
800mm
[31 1/2"]
726mm
[28 9/16"]
226mm
[8 7/8"]
207mm
[8 1/8"]
207mm
[8 1/8"]

A-A

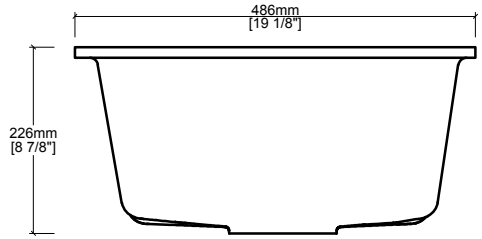
486mm
[19 1/8"]
226mm
[8 7/8"]

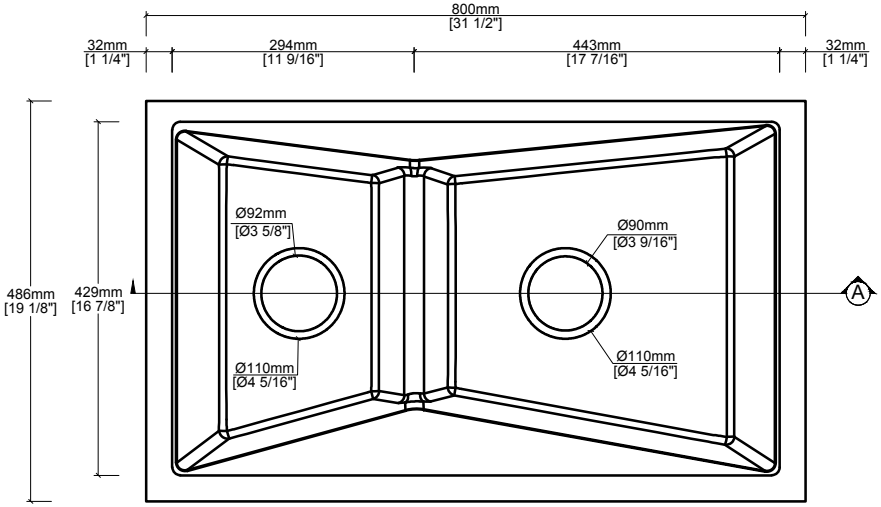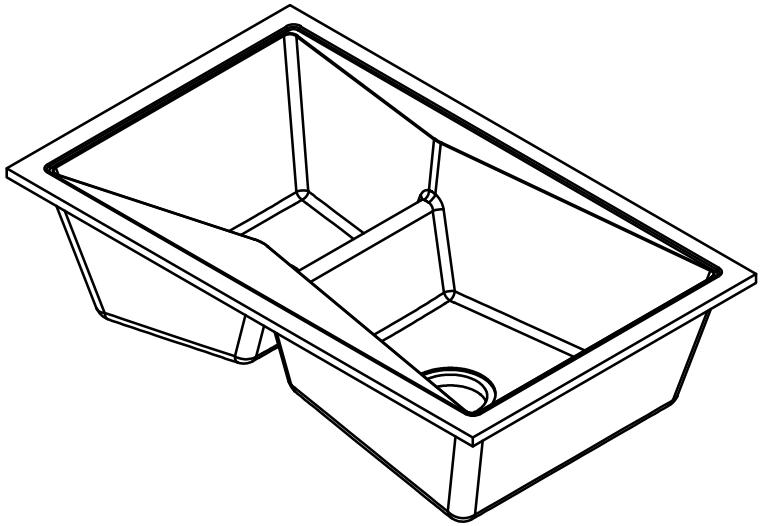
800mm
[31 1/2"]
32mm
[1 1/4"]
294mm
[11 9/16"]
443mm
[17 7/16"]
32mm
[1 1/4"]
486mm
[19 1/8"]
429mm
[16 7/8"]
Ø92mm
[Ø3 5/8"]
Ø90mm
[Ø3 9/16"]
Ø110mm
[Ø4 5/16"]
Ø110mm
[Ø4 5/16"]
A