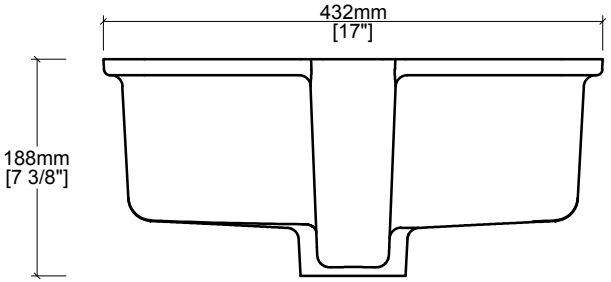
432mm
[17"]
188mm
[7 3/8"]

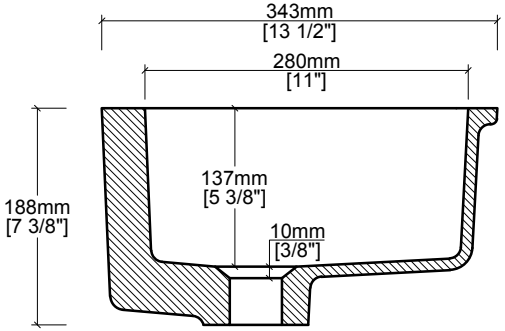
343mm
[13 1/2"]
280mm
[11"]
137mm
[5 3/8"]
188mm
[7 3/8"]
10mm
[3/8"]

A-A

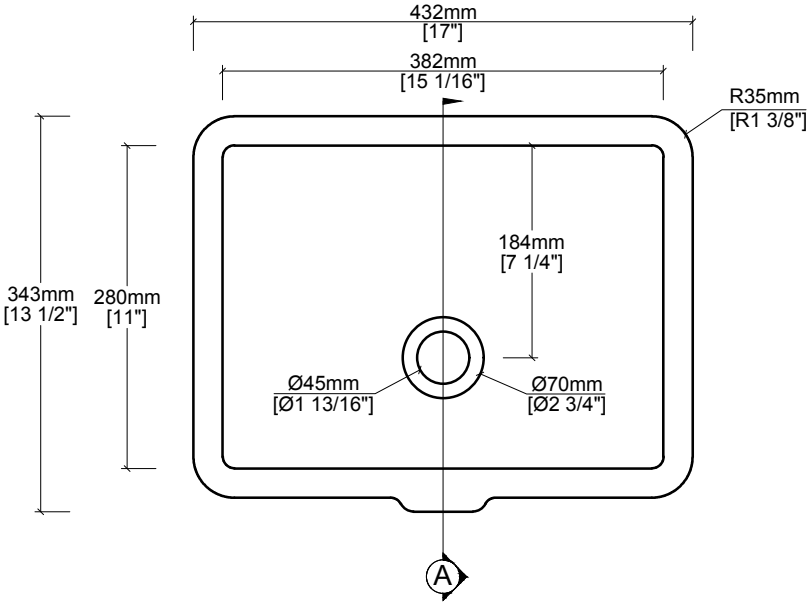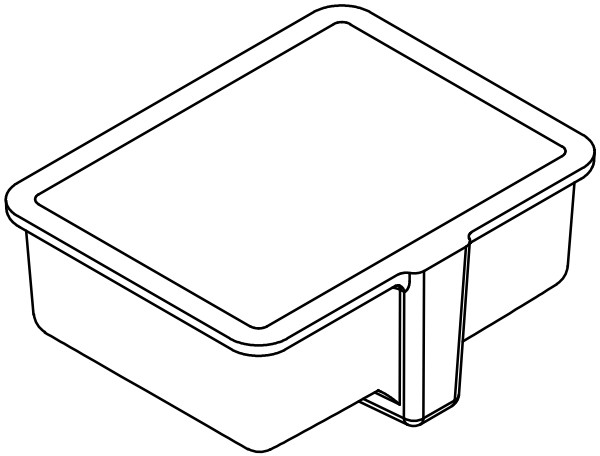
432mm
[17"]
382mm
[15 1/16"]
R35mm
[R1 3/8"]
184mm
[7 1/4"]
343mm
[13 1/2"]
280mm
[11"]
Ø45mm
[Ø1 13/16"]
Ø70mm
[Ø2 3/4"]
A