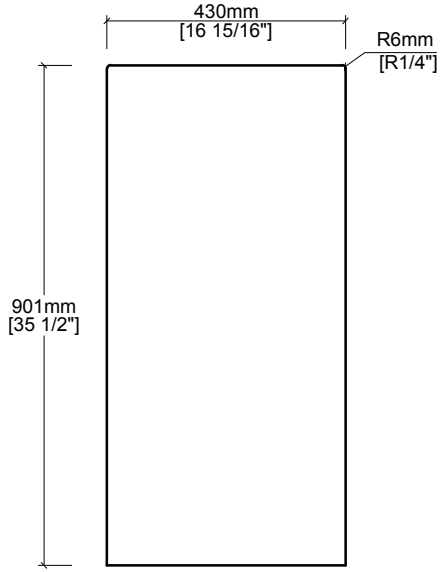
430mm
[16 15/16"]
R6mm
[R1/4"]
901mm
[35 1/2"]

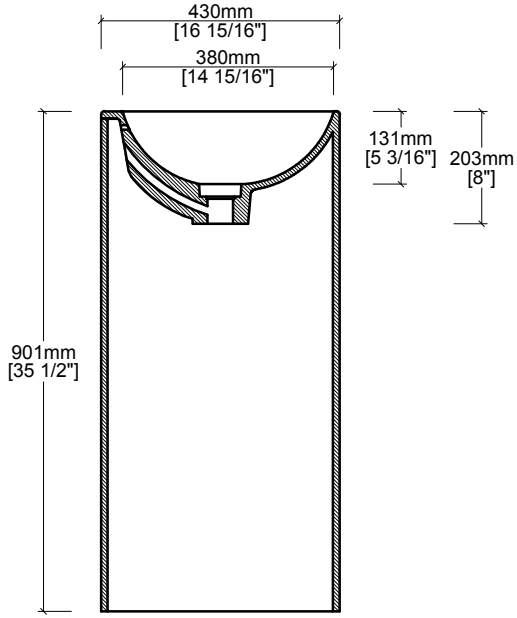
430mm
[16 15/16"]
380mm
[14 15/16"]
131mm
[5 3/16"]
203mm
[8"]
901mm
[35 1/2"]

A-A

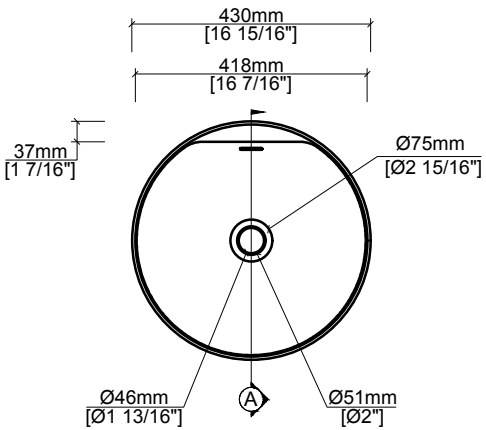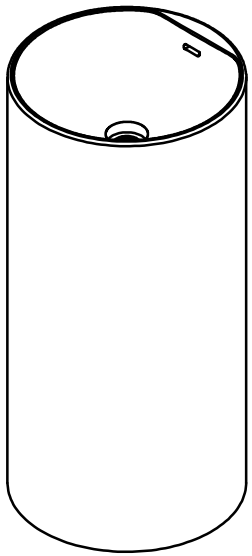
430mm
[16 15/16"]
418mm
[16 7/16"]
37mm
[1 7/16"]
Ø75mm
[Ø2 15/16"]
Ø46mm
[Ø1 13/16"]
A
Ø51mm
[Ø2"]