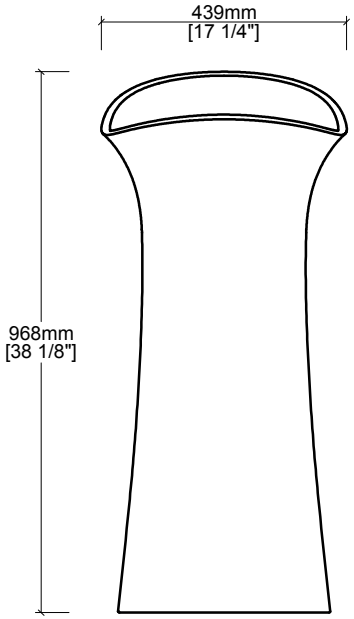
439mm
[17 1/4"]
968mm
[38 1/8"]

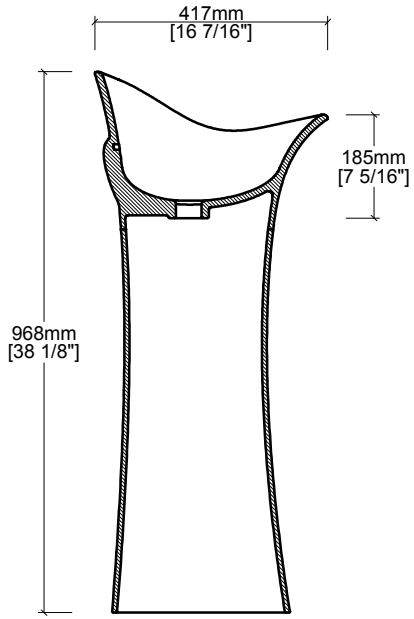
417mm
[16 7/16"]
185mm
[7 5/16"]
968mm
[38 1/8"]

A-A

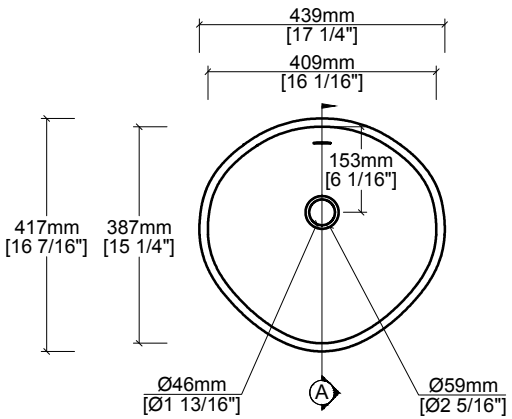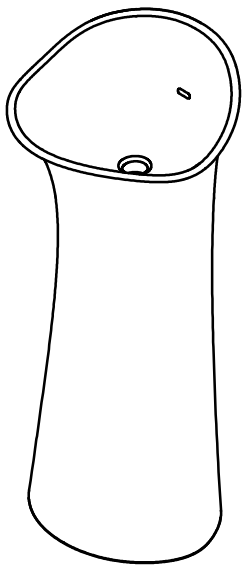
439mm
[17 1/4"]
409mm
[16 1/16"]
153mm
[6 1/16"]
417mm
[16 7/16"]
387mm
[15 1/4"]
Ø46mm
[Ø1 13/16"]
A
Ø59mm
[Ø2 5/16"]