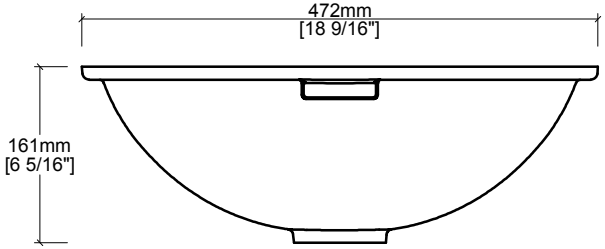
472mm
[18 9/16"]
161mm
[6 5/16"]

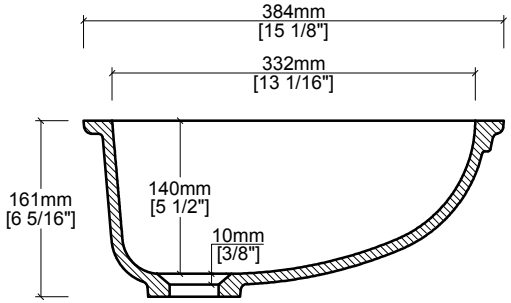
384mm
[15 1/8"]
332mm
[13 1/16"]
161mm
[6 5/16"]
140mm
[5 1/2"]
10mm
[3/8"]

A-A

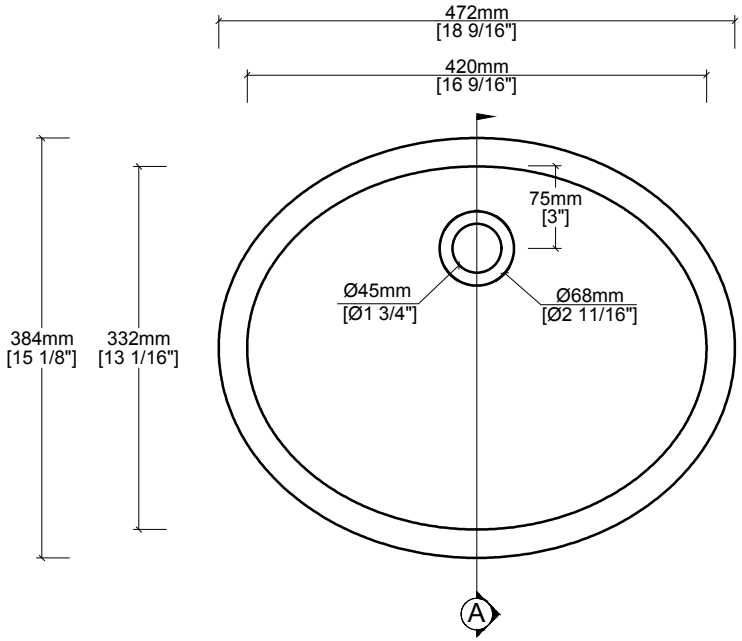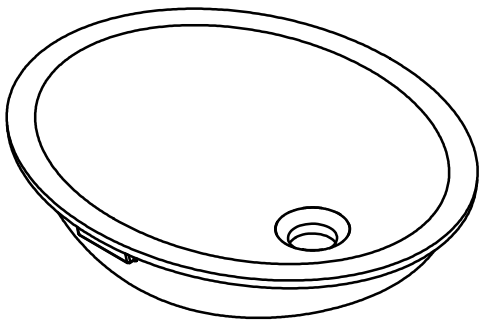
472mm
[18 9/16"]
420mm
[16 9/16"]
75mm
[3"]
Ø45mm
[Ø1 3/4"]
Ø68mm
[Ø2 11/16"]
384mm
[15 1/8"]
332mm
[13 1/16"]
A